YAMAHA RAPTOR 250

CONTROL ARM INSTALLATION

REMOVAL / INSTALLATION / CAMBER & TOE

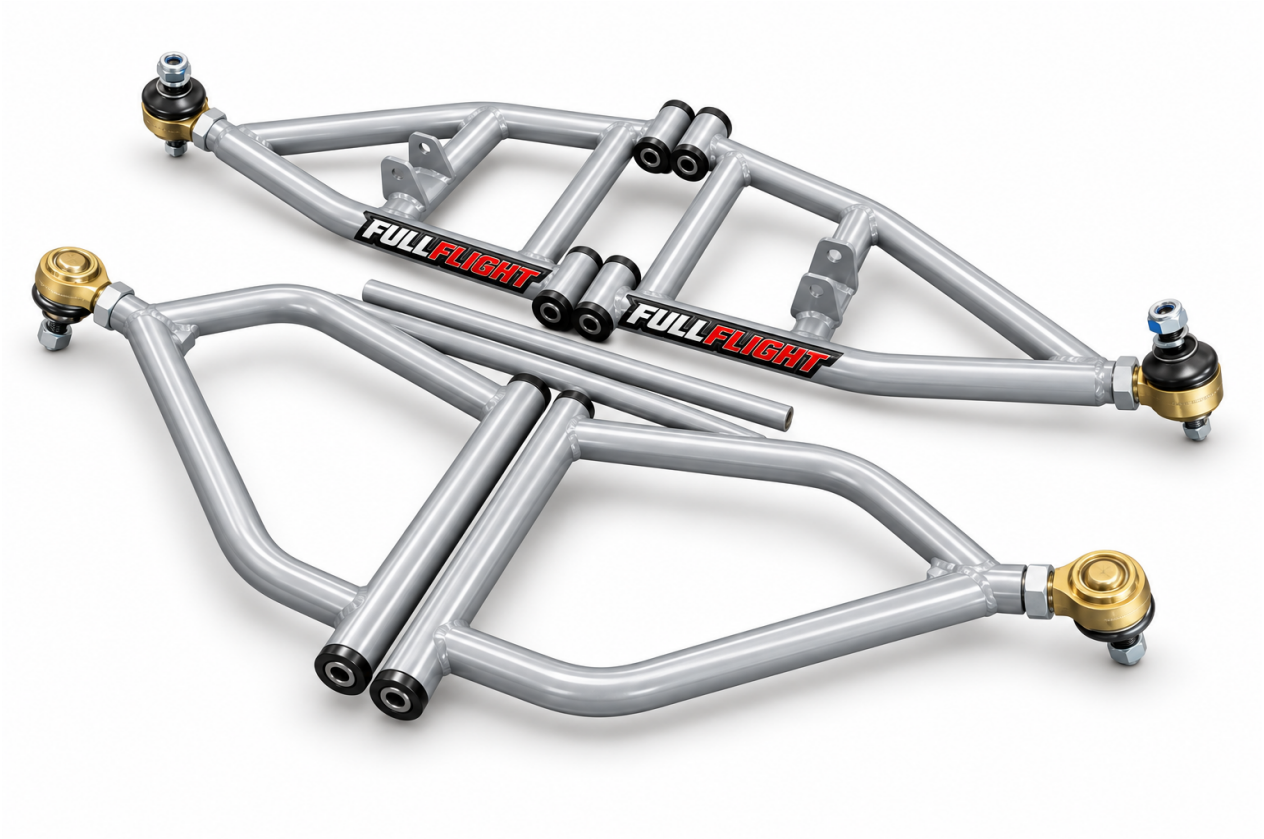

LOWER-ARM DECALS FACE FORWARD

Upper arm: longer, straighter leg forward.

One model manual - width and shock choices included. Product photograph is a catalog illustration; verify the supplied kit. Review draft pending hardware and exact-year procedure checks.

Yamaha Raptor 250

01 / Model, kit and orientation

One model manual covers its listed widths, finishes, shock choices and year configurations.

Listed application	Width / configuration options
Yamaha Raptor 125/250 2008-2013 A-Arms	RAPTOR 125/250 +3; RAPTOR 125/250 +4

Fullflight installation direction: lower-arm decals face forward when installed.

Fullflight installation direction: the longer, straighter leg of the upper arm faces the front of the vehicle.

The shared Raptor 125/250 listing covers +3/+4 options and lists six steel mounting sleeves with twelve Delrin bushings. Match the supplied sleeve positions to the actual frame.

The shared 2008-2013 title is not a production-year chart for each model. Confirm actual year before using this kit.

Prepare: rated jack stands and wheel chocks; metric hand tools; a suitable joint separator; calibrated torque wrench; new required retaining hardware; straightedge, angle gauge and tape measure. Work on a firm level floor with the engine off. Use the exact-year factory manual for lifting points, access, torque and replacement fasteners.

Review status: these instructions combine current Fullflight listing data with a general installation workflow. Full physical-kit, exact-year factory procedure and hardware specification checks remain necessary. No unverified numerical torque or camber target is supplied.

Yamaha Raptor 250

02 / Picture and connection map

Numbered arrows identify visible product features; this is not an on-vehicle installation photograph.
FRONT: longer, straighter upper-arm leg; lower-arm decals forward.

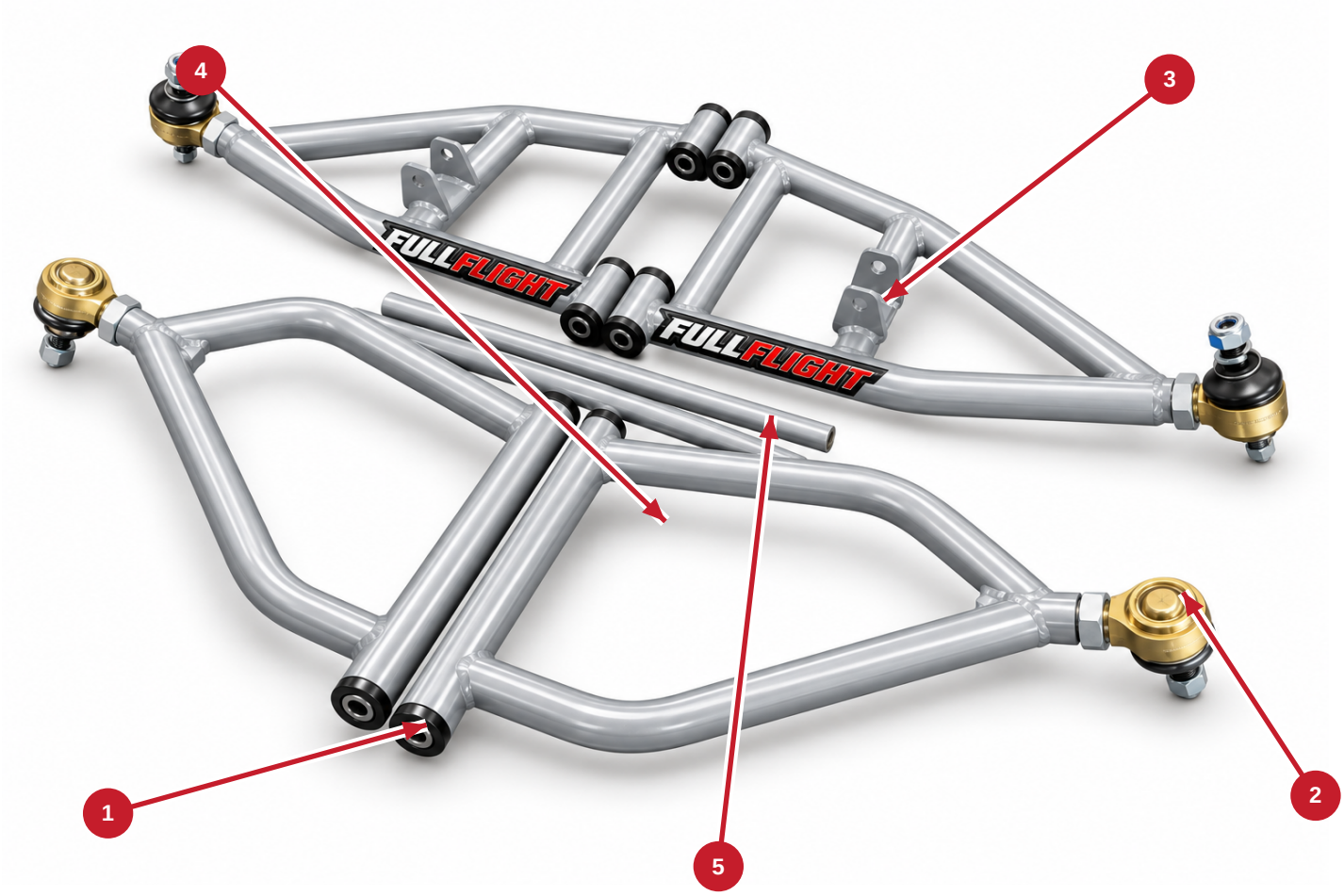

1 Frame-pivot area shown

2 Knuckle/joint connection shown

3 Shock-tab area shown

4 Tie-rod tubes shown

5 LOWER-ARM DECALS FACE FORWARD

Photograph provenance: the first image on the linked Fullflight product listing. Several listings reuse images across models or generations. The arrows identify visible features only; verify actual model geometry, joint type, spacers and left/right orientation from the supplied kit. In the loose-parts photo, the page direction does not represent vehicle forward.

Yamaha Raptor 250

03 / Remove the factory arms

Photograph the original installation first. Work on one side while retaining the other side for reference.

1. **Lift and secure.** Loosen wheel nuts while grounded, chock the opposite axle and support the frame on rated stands at the proper lifting points. Remove the wheel; label each side's hardware. Never rely on a hydraulic jack alone.

2. **Support the arm and knuckle.** Use a controllable support under the lower arm without lifting the frame off its stands. Support the knuckle/hub independently so it cannot drop or pull on a hose.

3. **Release steering and brake routing.** Remove the arm-mounted hose clamps and disconnect the tie-rod end only if required for access. If a caliper is removed, hang it from the frame with the hose connected. Do not press the brake pedal/lever with a caliper off its disc.

4. **Remove load-bearing connections in the factory sequence.** With arm load supported, disconnect the relevant shock and stabilizer links only as required. Keep the shock secured; do not open a pressurized shock or spring assembly.

5. **Release the knuckle connection.** Follow the actual joint design: use a proper separator for tapered studs, or remove the specified through-bolt/pinch-bolt and spacers for other designs. Protect boots and threads. Do not strike the stud, grind the seat or improvise adapters.

6. **Withdraw the pivot bolts.** With all components supported, remove the relevant frame pivot hardware and arm. Preserve each collar, washer, seal, clip and spacer in labelled order. Inspect frame tabs, bolt holes, knuckles and bolts; repair damage before installation.

Exact-year access may also require guards, bumper parts, exhaust supports or hubs. Follow the factory procedure where it differs from this draft. Opening a brake circuit is separate brake service and requires the correct bleeding procedure before riding.

Yamaha Raptor 250

04 / Install the Fullflight arms

Confirm the kit, model and connection style before beginning assembly.

1. **Orient the parts.** Lower-arm decals face forward. Upper arms have the longer, straighter leg forward. Do not infer installed orientation from how parts are arranged in the catalog picture.

2. **Prepare the pivots.** For bushing pivots, install the correct Delrin bushings and steel sleeves in their matched locations. Keep sleeve lengths and spacers as specified; never pull a mounting gap closed with bolt torque.

3. **Mount the arms.** Fit the lower arm first where the factory sequence allows, then the matched upper arm. Start the correct fasteners by hand. Do not bend frame tabs, drill holes or substitute smaller hardware to make a mismatch fit.

4. **Connect the knuckle.** Confirm joint type and correct upper/lower positions. Use the supplied-design nuts, through-bolts, adapters and retainers; keep the boots intact. Use the specified aftermarket-joint torque where supplied; OEM torque is not automatically correct for a different joint.

5. **Refit suspension and steering.** Attach the ordered shock setup and any retained stabilizer links with matched hardware. Fit the kit's correct tie rods with identified left/right threads and sufficient engagement at both ends. Center the steering.

6. **Route hoses and secure the assembly.** Refit clamps, guards and calipers. Check steering lock and usable suspension travel for hose tension, contact and joint binding. Torque structural hardware before loading the tires for alignment. Repeat on the opposite side.

Standard stock-length-shock compatibility is order-specific. Special shock options, spindle conversions, frame adapters and supplied brake-line packages must match the selected kit. If a hydraulic line is replaced, follow the factory bleeding method and verify a firm pedal/lever and leak-free system.

Yamaha Raptor 250

05 / Simple camber and toe

Original measurement diagrams; level floor, equal tire pressures and consistent ride-height loading.

CAMBER - FRONT VIEW

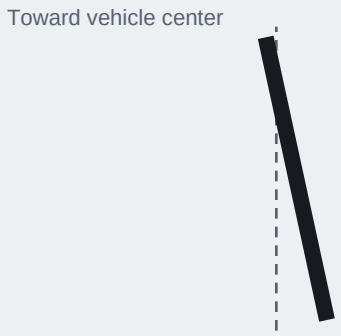

Top inward = negative

TOE - TOP VIEW

Total toe-in = R - F

1. **Settle the vehicle.** Secure all connections, set equal side-to-side tire pressures and roll the vehicle to settle the suspension. Use the same normal ride height and loading for all readings.
2. **Measure camber first.** Place a straightedge against sound upper/lower rim edges and measure tilt from vertical. Use the approved target for the actual kit; no universal numeric camber setting is supplied here.
3. **Make a controlled adjustment.** Lift and support before releasing a loaded joint. On a conventional adjustable upper threaded joint, moving it inward generally adds negative camber. Reassemble, torque and retain before reloading. For frame heims, unequal front/rear adjustment also changes caster; use the confirmed paired-setting method.
4. **Measure toe.** Center the steering. Mark repeatable front-tire centerlines, measure front distance F at axle height, then roll the same marks to the rear and measure R at the same height. Positive R - F is toe-in.
5. **Adjust rods and recheck.** Keep steering centered and engagement adequate at both ends. Tighten jam nuts and settle again. Use the approved model/kit toe target. The public Fullflight ATV guide describes equal front/rear readings; do not assume that target applies to every UTV kit.

Example only: R = 40.000 in and F = 39.875 in gives 0.125 in total toe-in. This illustrates the calculation, not a prescribed setting.

Yamaha Raptor 250

06 / Final checks and records

Record the specifications actually used. Blank entries must be resolved before riding.

Check / record	Specification or result
Upper/lower frame pivots	Torque and hardware source: _____
Knuckle joint and adjustment locks	Component-specific torque / retention: _____
Shock, steering and stabilizer mounts	Applicable torque: _____
Caliper, guards and wheels	Exact-year specification: _____
Alignment	Camber L/R: _____ Toe F/R: _____ Total: _____
Kit identification	Year/VIN: _____ Width/shock/spindles: _____

Locking: verify the correct threadlocker, designated threads, minimum engagement and cure requirements for the actual joint generation. The public ATV guide specifies a six-turn-out limit and 24-hour cure; those do not independently establish engagement or locking for every current kit.

Inspect: decals forward, correct upper orientation, all specified nuts torqued, fresh required cotter pins/clips, intact boots and no contact or binding at steering lock and usable bump/droop. Full-travel checks may require proper spring/shock equipment and a suspension technician. Check brakes stationary, then test at walking speed off-road and reinspect after the first short ride.

Sources and verification status: current Fullflight product listing(s) checked 12 Oct 2026; manufacturer orientation instructions supplied in this conversation; Fullflight public installation guidance. This draft does not claim an exact-year factory procedure has been verified for every model. Obtain the correct factory service manual and confirm all model-specific hardware before customer release.

Yamaha Raptor 125/250 2008-2013 A-Arms - source listing

Fullflight public installation reference | Add verified on-vehicle photos before presenting these loose-product illustrations as an installation photo sequence.